CANNONDESIGN

SUBMITTAL IDENTIFICATION SHEET

To be completed by Contractor/CM

WEBSTER UNIVERSITY ISB
PROJECT NAME

8274 BIG BEND BLVD
ADDRESS

NUMBER

WEBSTER UNIVERSITY
OWNER

CANNON DESIGN
ARCHITECT / ENGINEER

Ryan Tune
SUBMITTED BY

055213-014
CONTRACTOR / CM SUBMITTAL NO.

CANNON DESIGN SUBMITTAL NO.

DRAWING / DETAIL REFERENCE

055213
SPECIFICATION SECTION / PARAGRAPH

MANUFACTURER / SUPPLIER

ITEM / PRODUCT ID

REQUIRED DATE

PRIORITY

CRITICAL

ITEM BEING SUBMITTED (check only one)

- (●) Shop Drawings
- ( ) Samples (_____ copies)
- ( ) LEED Submittal
- ( ) Certification / Qualifications
- ( ) Record Documents
- ( ) Product Data
- ( ) Coordination Drawing
- ( ) Calculations
- ( ) Schedules
- ( ) O&M Manuals
- ( ) Other _____

ITEM BEING SUBMITTED FOR (check only one)

- (●) Action
- ( ) Information Only
- ( ) Record

REMARKS OR DEVIATIONS

The re-submittal reflects the re-cast concrete steps, which required re-detailing these rails. The details also reflect new connections to the side of the concrete steps, where the original embed plates were not re-installed. This required additional engineering to meet the performance requirements.

CONTRACTOR / CM CERTIFICATION
(SUBMITTALS NOT CERTIFIED WILL BE RETURNED WITHOUT REVIEW)

PARIC

PARIC CORPORATION
SUBMITTAL STAMP

THIS SHOP DRAWING HAS BEEN REVIEWED BY PARIC CORPORATION

Subcontractor remains responsible for dimensions, quantities, coordination with other trades and compliance with contract documents.

By:
Devin D. Gates

Ryan Tune
REVIEWED BY

06/06/17
DATE

To be completed by Reviewer

05 5213-014 REV002
CANNON DESIGN SUBMITTAL NUMBER

6/6/17
RECEIVED DATE

- ( ) A. No Exceptions Taken
  No further review of submittal is required.
- (●) B. Make Corrections Noted
  Incorporate corrections in work; resubmission is not required.
- ( ) C. Revise and Resubmit
  Revise as noted, and resubmit for review.
- ( ) D. Rejected
  Submittal is not in compliance with Contract Documents; provide new submittal.
- ( ) E. For Record / Information Only
  Submittal was reviewed for Record / Information purposes only.
- ( ) F. Not Required for Review
  Submittal is not required by Contract Documents and has not been reviewed.

Review is for conformance with the design concept of this project and for general compliance with contract documents. Contractor is responsible for quantities, dimensions and compliance with contract documents and for information that pertains to fabrication processes, construction techniques and coordination of this work with all trades which will be affected thereby. This review is null and void if submittal deviates from contract documents and does not indicate or note deviations.

A/E COMMENTS

( ) See attached sheet(s) for additional comments

COORDINATE WITH SAFETY INTERLOCKING GATE OF LOADING DOCK LIFT AT UPPER LANDING. REFER SUBMITTAL 111319-003.

ANY GAP BETWEEN GATE AND RAILING SHOULD BE LESS THAN 4".

Kelvin Patel
Digitally signed by Kelvin Patel
DN: C=US, E=kpatel@cannondesign.com, O=Cannon Design, OU=Architect, CN=Kelvin Patel
Date: 2017.06.15 13:09:57-05'00'
REVIEWED BY

6/15/17
DATE

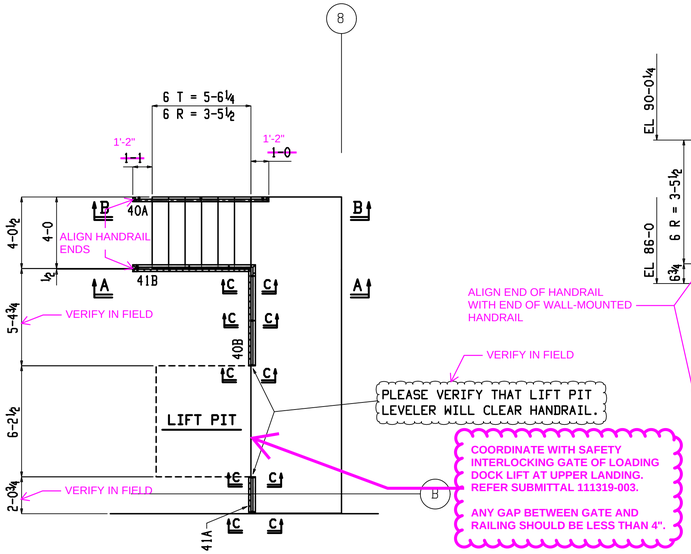

LOADING DOCK~ PLAN VIEW

PLEASE VERIFY THAT LIFT PIT LEVELER WILL CLEAR HANDRAIL.

VERIFY IN FIELD

COORDINATE WITH SAFETY INTERLOCKING GATE OF LOADING DOCK LIFT AT UPPER LANDING. REFER SUBMITTAL 111319-003.

ANY GAP BETWEEN GATE AND RAILING SHOULD BE LESS THAN 4".

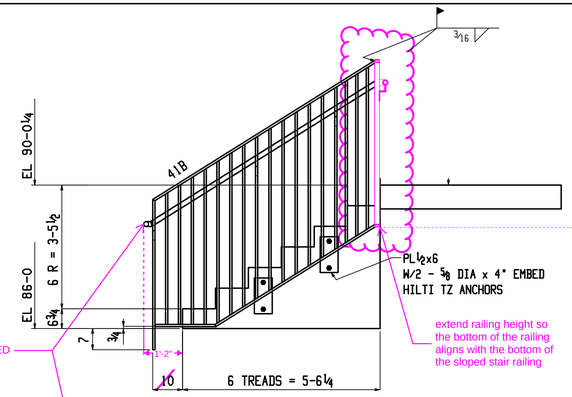

Section A-A

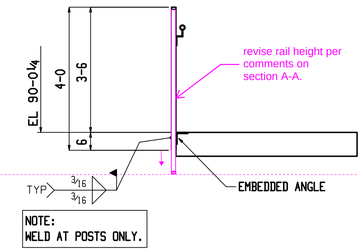

Section C-C

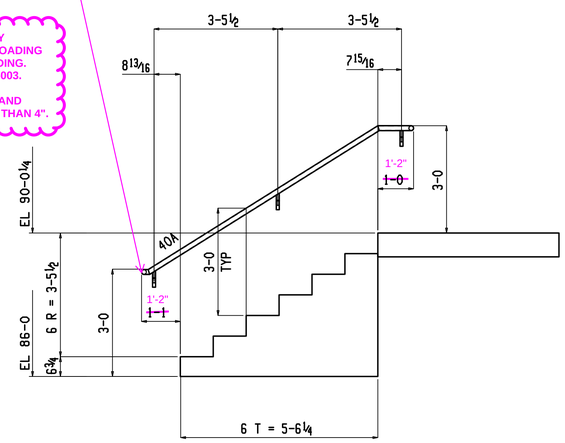

Section B-B

1	6-06-17: FOR APPROVAL
0	4-21-17: FOR APPROVAL

ATLAS IRON WORKS — EST. 1922

Project: WEBSTER UNIVERSITY
Customer: PARIC
Owner: WEBSTER UNIVERSITY
Location: WEBSTER GROVES, MO.
Dwn: SAM Date: 04-19-17 Ckd: BD Date: 4-21-17
Job No. A16013M DWG#: E10

BILL OF MATERIAL

QTY TOTAL	QTY UNIT	PC MARK	DESCRIPTION	LENGTH		REMARKS
ONE		40A	HANDRAIL			E10
1	1	40A	PIPE 1¼ STD	10	0	LIN.FT. A53
2	2	p666	PL¼x1	0	7 7/16	BENT A36
1	1	p542	PL¼x1	0	6 15/16	BENT A36
			FIELD BOLTS			
3			⅜ DIA EXP ANCH	0	3	
ONE		40B	GUARDRAIL			E10
1	1	hss353	PIPE 1¼ STD	5	2 3/16	A53
3	3	p549	PL¼x¾	0	6 13/16	BENT A36
2	2	p667	PL¾x1½	5	4¾	A36
3	3	p536	PL¾x1½	3	10½	A36
13	13	sb10	SB¾	3	10½	A36

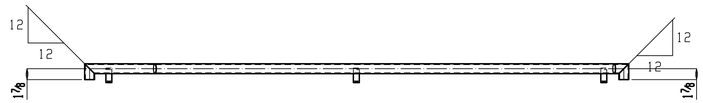

1-PIPE 1¼ STDx10-0 LIN.FT.

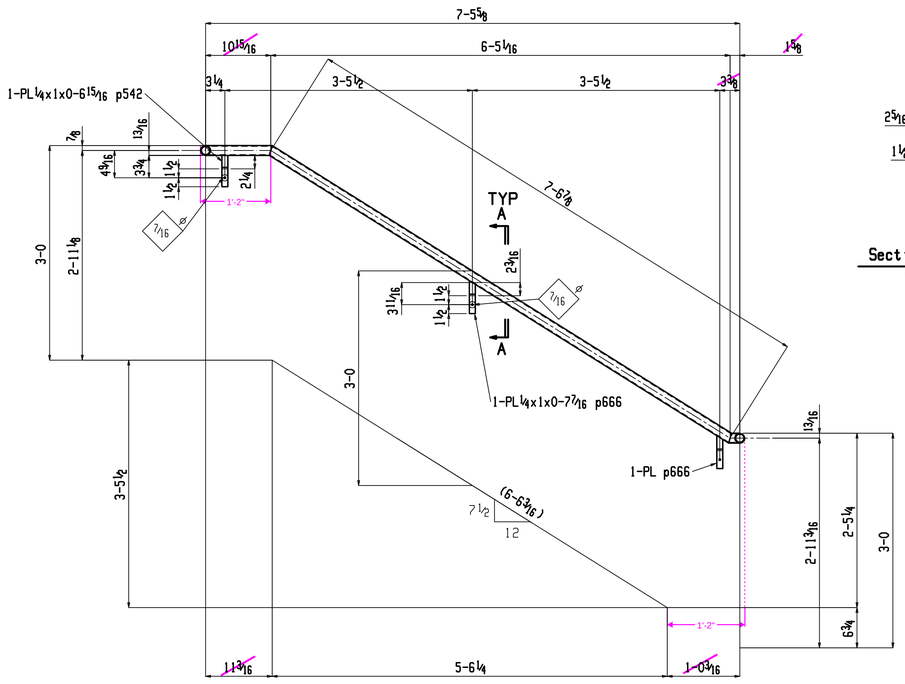

ONE HANDRAIL 40A

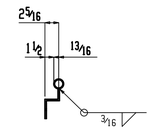

Section A-A
40A

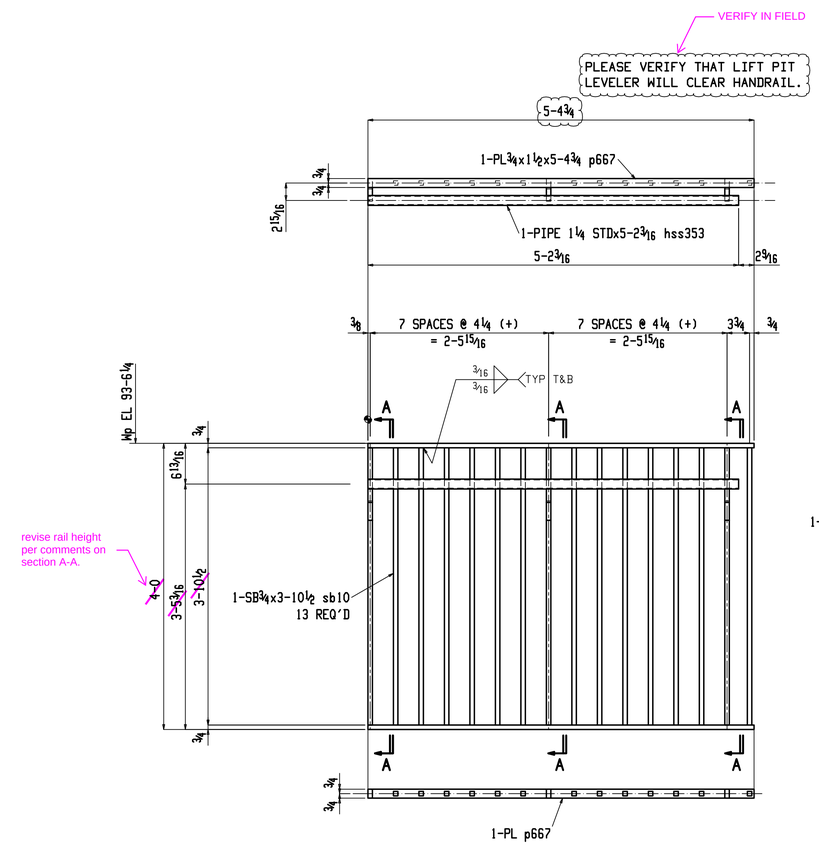

ONE GUARDRAIL 40B

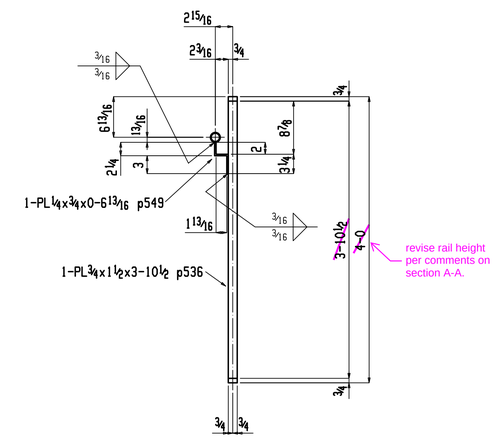

Section A-A
40B

1 6-06-17: FOR APPROVAL	ATLAS IRON WORKS — EST. 1928
0 4-21-17: FOR APPROVAL	
Sequence: - Ref. E-Plans: SEE BOM	Project: WEBSTER UNIVERSITY
Material: ASTM A36 U.N.O. Edge Dist.: 1¼" U.N.O.	Customer: PARIC
Holes: 13/16" UNO Bolts: NOTED	Owner: WEBSTER UNIVERSITY
Cleaning: SSPC-SP1 & 2	Location: WEBSTER GROVES, MO.
Paint: 2.0 MILS DFT S-W PRO-CRYL UNIVERSAL PRIMER B66-310 SERIES	Dwn: SAM Date: 04-20-17 Ckd: BD Date: 4-21-17
	Job No. A16013M DWG#: 40

BILL OF MATERIAL

QTY TOTAL	QTY UNIT	PC MARK	DESCRIPTION	LENGTH		REMARKS
ONE		41A	GUARDRAIL			E10
1	1	hss336	PIPE 1¼ STD	1	11 15/16	A53
2	2	p549	PL¼x¾	0	6 13/16	BENT A36
2	2	p536	PL¾x1½	3	10½	A36
2	2	p523	PL¾x1½	1	11 15/16	A36
5	5	sb10	SB¾	3	10½	A36
ONE		41B	GUARDRAIL			E10
1	1	hss352	PIPE 1¼ STD	9	0	LIN.FT. A53
1	1	p662	PL¾x1½	7	4 3/16	A36
1	1	p679	PL¾x1½	5	5½	A36
3	3	p680	PL¼x¾	0	6¾	BENT A36
4	4	p677	PL¾x1½	4	6⅝	A36
1	1	p668	PL¾x1½	4	2⅜	A36
1	1	p670	PL¾x1½	1	8⅜	A36
2	2	p673	PL½x6	1	0	A36
9	9	sb23	SB¾	4	6⅝	A36
1	1	sb21	SB¾	4	4 5/16	A36
1	1	sb20	SB¾	4	1⅝	A36
1	1	sb19	SB¾	3	10⅞	A36
1	1	sb18	SB¾	3	8 3/16	A36
			FIELD BOLTS			
4			⅝ DIA EXP ANCH	0	5	HILTI KWIKBOLT TZ

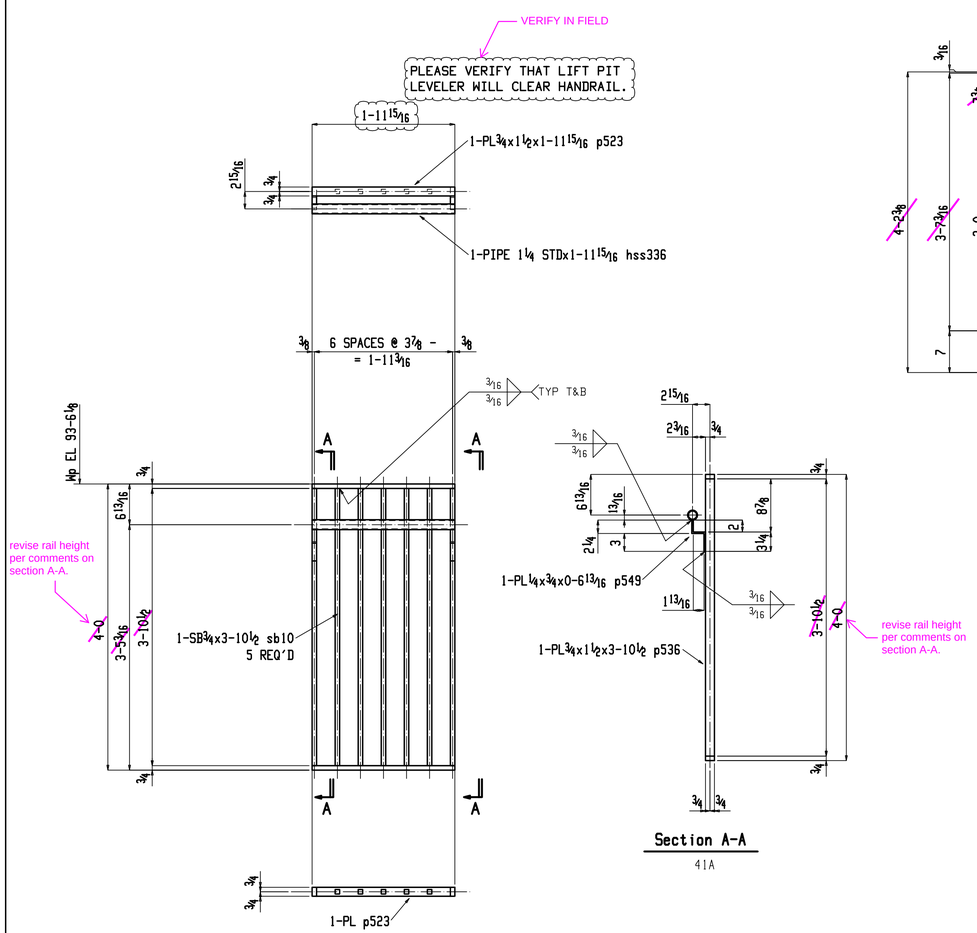

ONE GUARDRAIL 41A

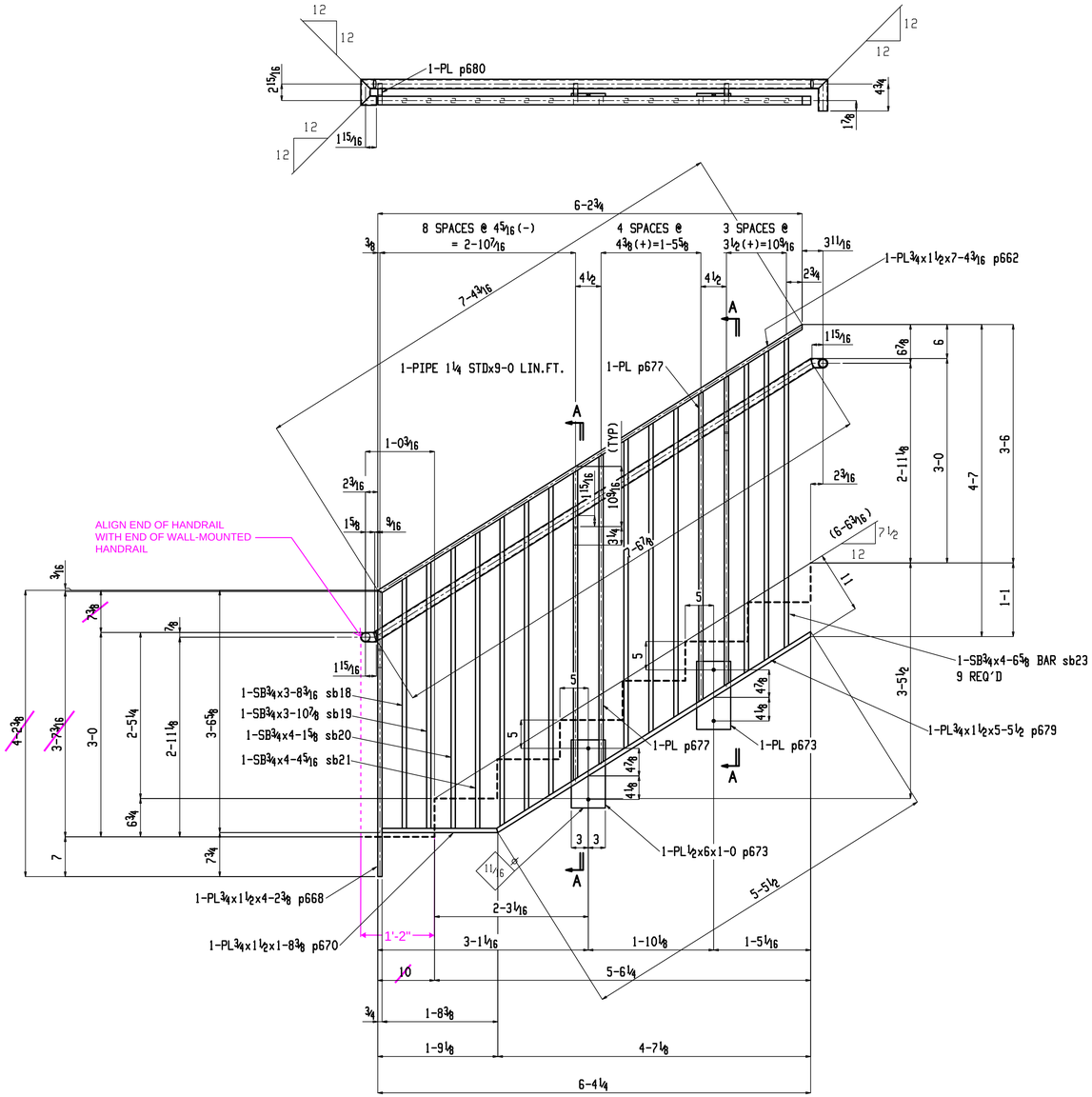

ONE GUARDRAIL 41B

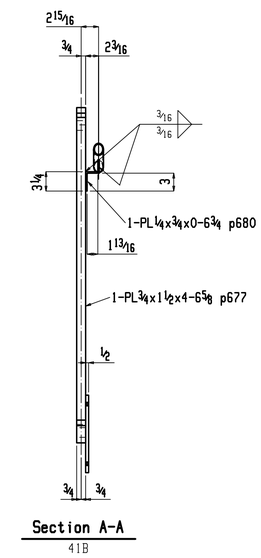

1 6-06-17: FOR APPROVAL	ATLAS IRON WORKS — EST. 1928
0 4-21-17: FOR APPROVAL	
Sequence: - Ref. E-Plans: SEE BOM	Project: WEBSTER UNIVERSITY
Material: ASTM A36 U.N.O. Edge Dist.: 1¼" U.N.O.	Customer: PARIC
Holes: 13/16" UNO Bolts: NOTED	Owner: WEBSTER UNIVERSITY
Cleaning: SSPC-SP1 & 2	Location: WEBSTER GROVES, MO.
Paint: 2.0 MILS DFT S-W PRO-CRYL UNIVERSAL PRIMER B66-310 SERIES	Dwn: SAM Date: 04-20-17 Ckd: BD Date: 4-21-17
	Job No. A16013M DWG#: 41