CANNONDESIGN

SUBMITTAL IDENTIFICATION SHEET

To be completed by Contractor/CM

WEBSTER UNIVERSITY ISB
PROJECT NAME

8274 BIG BEND BLVD
ADDRESS

NUMBER

WEBSTER UNIVERSITY
OWNER

CANNON DESIGN
ARCHITECT / ENGINEER

Joe Voypick
SUBMITTED BY

055213-014
CONTRACTOR / CM SUBMITTAL NO.

CANNON DESIGN SUBMITTAL NO.

DRAWING / DETAIL REFERENCE

055213
SPECIFICATION SECTION / PARAGRAPH

MANUFACTURER / SUPPLIER

ITEM / PRODUCT ID

REQUIRED DATE

PRIORITY

CRITICAL

ITEM BEING SUBMITTED (check only one)

- (•) Shop Drawings
- ( ) Samples (_____ copies)
- ( ) LEED Submittal
- ( ) Certification / Qualifications
- ( ) Record Documents
- ( ) Product Data
- ( ) Coordination Drawing
- ( ) Calculations
- ( ) Schedules
- ( ) O&M Manuals
- ( ) Other _____

ITEM BEING SUBMITTED FOR (check only one)

- (•) Action
- ( ) Information Only
- ( ) Record

REMARKS OR DEVIATIONS

CONTRACTOR / CM CERTIFICATION
(SUBMITTALS NOT CERTIFIED WILL BE RETURNED WITHOUT REVIEW)

PARIC

PARIC CORPORATION
SUBMITTAL STAMP

THIS SHOP DRAWING HAS BEEN REVIEWED BY PARIC CORPORATION

Subcontractor remains responsible for dimensions, quantities, coordination with other trades and compliance with contract documents.

By:
Devin D. Gates

Joe Voypick
REVIEWED BY

4/26/17
DATE

To be completed by Reviewer

05 5213-014
CANNON DESIGN SUBMITTAL NUMBER

4/27/17
RECEIVED DATE

- ( ) A. No Exceptions Taken
  No further review of submittal is required.
- ( ) B. Make Corrections Noted
  Incorporate corrections in work; resubmission is not required.
- (•) C. Revise and Resubmit
  Revise as noted, and resubmit for review.
- ( ) D. Rejected
  Submittal is not in compliance with Contract Documents; provide new submittal.
- ( ) E. For Record / Information Only
  Submittal was reviewed for Record / Information purposes only.
- ( ) F. Not Required for Review
  Submittal is not required by Contract Documents and has not been reviewed.

Review is for conformance with the design concept of this project and for general compliance with contract documents. Contractor is responsible for quantities, dimensions and compliance with contract documents and for information that pertains to fabrication processes, construction techniques and coordination of this work with all trades which will be affected thereby. This review is null and void if submittal deviates from contract documents and does not indicate or note deviations.

A/E COMMENTS

( ) See attached sheet(s) for additional comments

No. of treads are incorrectly drawn for stair-4. Refer sheet A0503.

Revise railings accordingly and resubmit.

Kelvin Patel
Digitally signed by Kelvin Patel
DN: C=US, E=kpatel@cannondesign.com, O=Cannon Design, OU=Architect, CN=Kelvin Patel
Date: 2017.05.05 13:27:51-05'00'
REVIEWED BY

5/5/17
DATE

PARIC
EXPERIENCE. EXCELLENCE.
77 Westport Plaza
Suite 250
St. Louis, MO 63146

TRANSMITTAL

No. 15051-0562

Paric Corporation

PROJECT: 15051-Webster University Interdisciplinary Science Building

DATE: 04/26/2017

TO: Cannon Design
1100 Clark Ave
St Louis MO 63102

Fax;
314-241-2203

RE: Loading Dock Rails Shop Drawings

ATTN: Kelvin Patel

JOB: 15051

WE ARE SENDING:	SUBMITTED FOR:	ACTION TAKEN:
☑ Shop Drawings	☑ Approval	☐ Approved as Submitted
☐ Letter	☐ Your Use	☐ Approved as Noted
☐ Prints	☐ As Requested	☐ Returned After Loan
☐ Change Order	☐ Review and Comment	☐ Resubmit
☐ Plans		☐ Submit
☐ Samples	**SENT VIA:**	☐ Returned
☐ Specifications	☐ Attached	☐ Returned for Corrections
☐ Other:	☐ Separate Cover Via:	☐ Due Date:

Item	*Package*	*Code*	*Rev.*	*Copies*	*Date*	*Description*	*Status*
Submittal		055213-014	1		04/26/2017	Loading Dock Rails Shop Drawings	Submitted

NOTES:

CC:

Signed: _____
Devin Gates

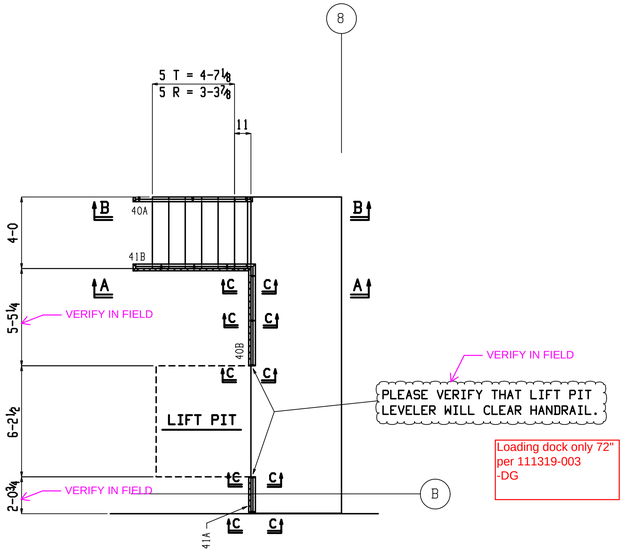

LOADING DOCK~ PLAN VIEW

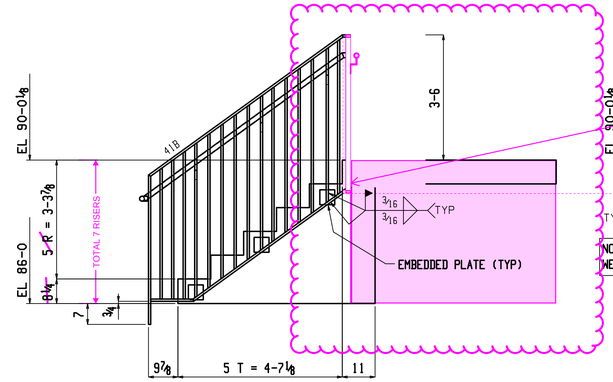

Section A-A

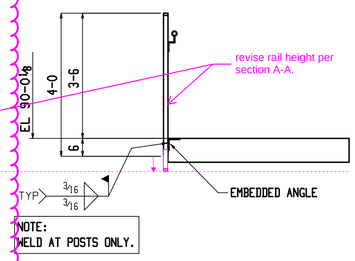

Section C-C

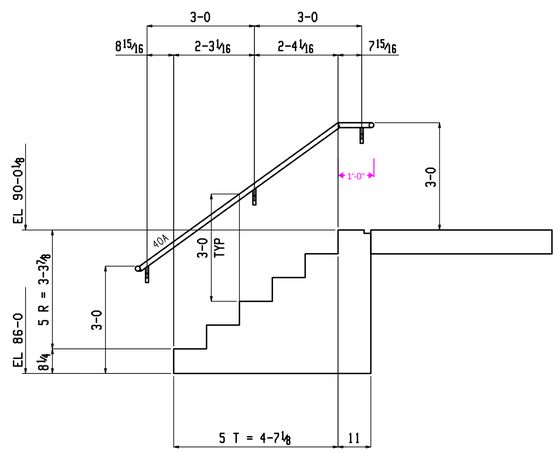

Section B-B

△	
△0	4-21-17: FOR APPROVAL

ATLAS IRON WORKS — EST. 1925

Project: WEBSTER UNIVERSITY
Customer: PARIC
Owner: WEBSTER UNIVERSITY
Location: WEBSTER GROVES, MO.
Dwn: SAM Date: 04-19-17 Ckd: BD Date: 4-21-17
Job No. A16013M DWG#: E10

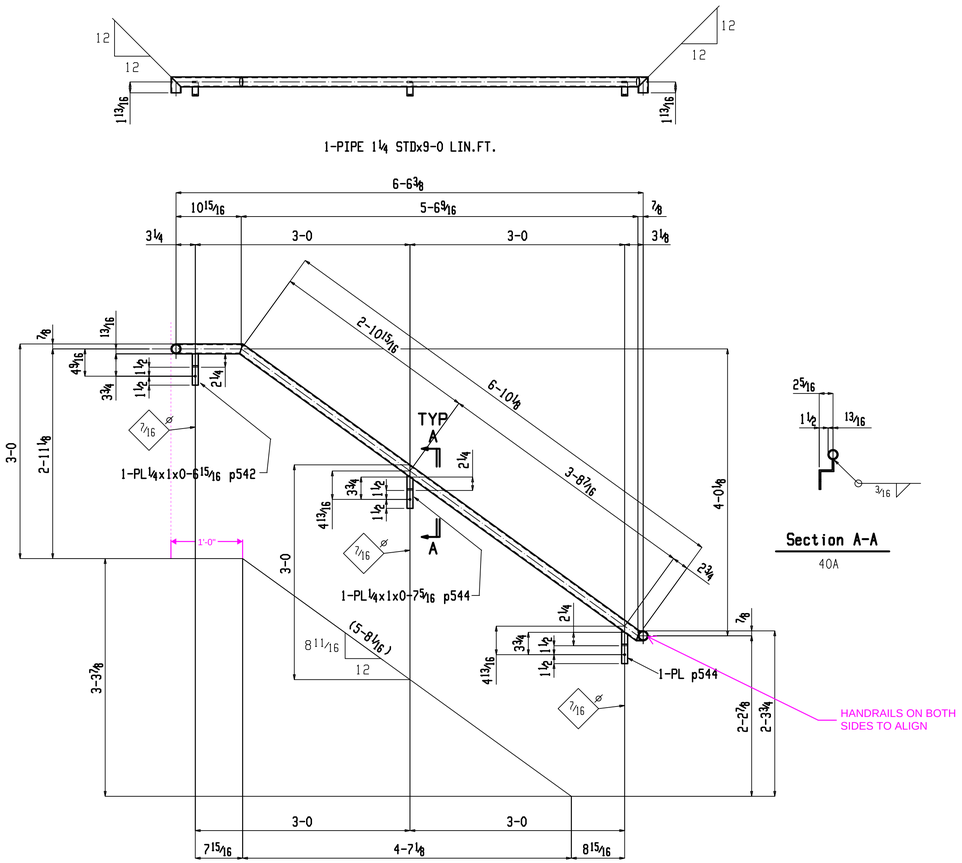

ONE HANDRAIL 40A

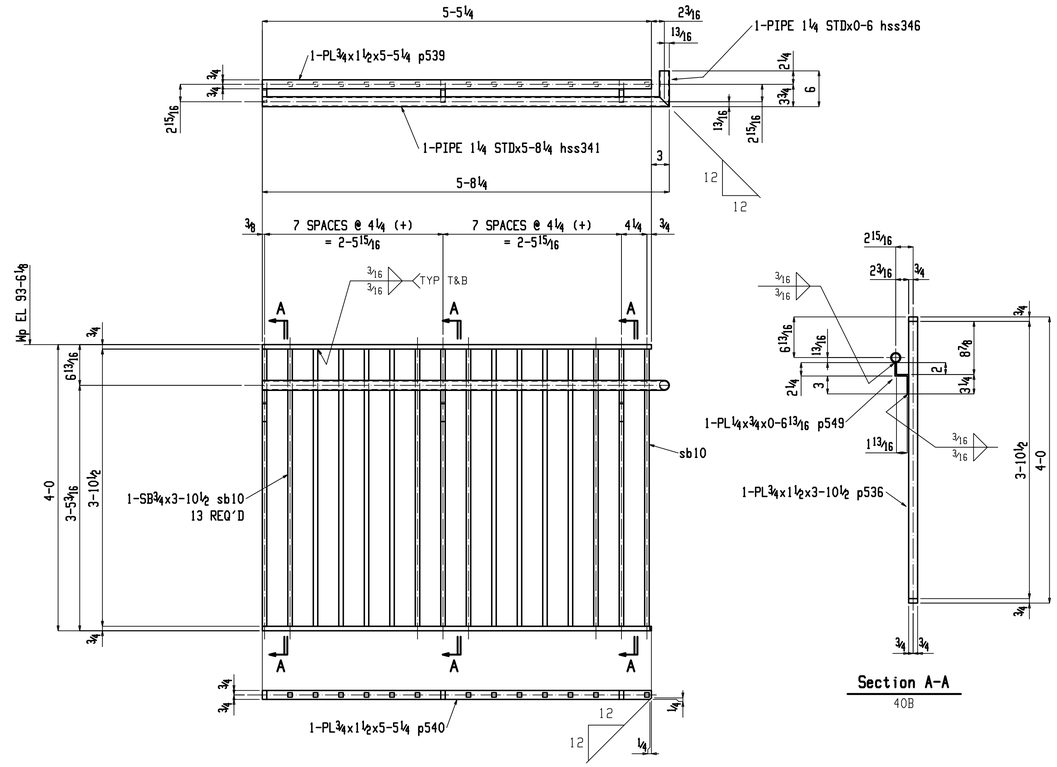

ONE GUARDRAIL 40B

BILL OF MATERIAL

QTY TOTAL	QTY UNIT	PC MARK	DESCRIPTION	LENGTH		REMARKS
ONE		40A	HANDRAIL			E10
1	1	40A	PIPE 1¼ STD	9	0	LIN FT A53
1	1	p542	PL¼x1	0	6 15/16	BENT A36
2	2	p544	PL¼x1	0	7 5/16	BENT A36
			FIELD BOLTS			
3			⅜ DIA EXP ANCH	0	3	
ONE		40B	GUARDRAIL			E10
1	1	hss341	PIPE 1¼ STD	5	8¼	A53
1	1	hss346	PIPE 1¼ STD	0	6	A53
3	3	p549	PL¼x¾	0	6 13/16	BENT A36
1	1	p539	PL¾x1½	5	5¼	A36
1	1	p540	PL¾x1½	5	5¼	A36
3	3	p536	PL¾x1½	3	10½	A36
13	13	sb10	SB¾	3	10½	A36

△

△0 4-21-17: FOR APPROVAL

ATLAS IRON WORKS — EST. 1922

Sequence: -
Ref. E-Plans: SEE BOM
Material: ASTM A36 U.N.O.
Edge Dist.: 1¼" U.N.O.
Holes: 13/16" UNO
Bolts: NOTED
Cleaning: SSPC-SP2 & 3
Paint: SHOP PRIME - GRAY (055213)
(S-W #B50AV8431 UNIV. MOD. ALKYD PRIMER)

Project: WEBSTER UNIVERSITY
Customer: PARIC
Owner: WEBSTER UNIVERSITY
Location: WEBSTER GROVES, MO.
Dwn: SAM Date: 04-20-17 Ckd: BD Date: 4-21-17
Job No. A16013M
DWG#: 40

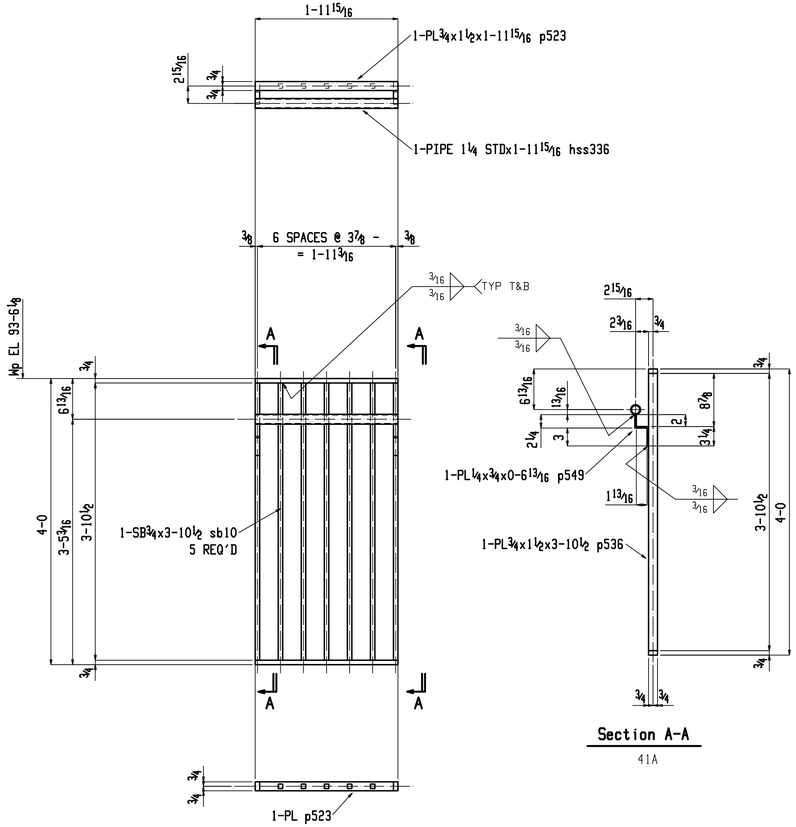

Section A-A

41A

ONE GUARDRAIL 41A

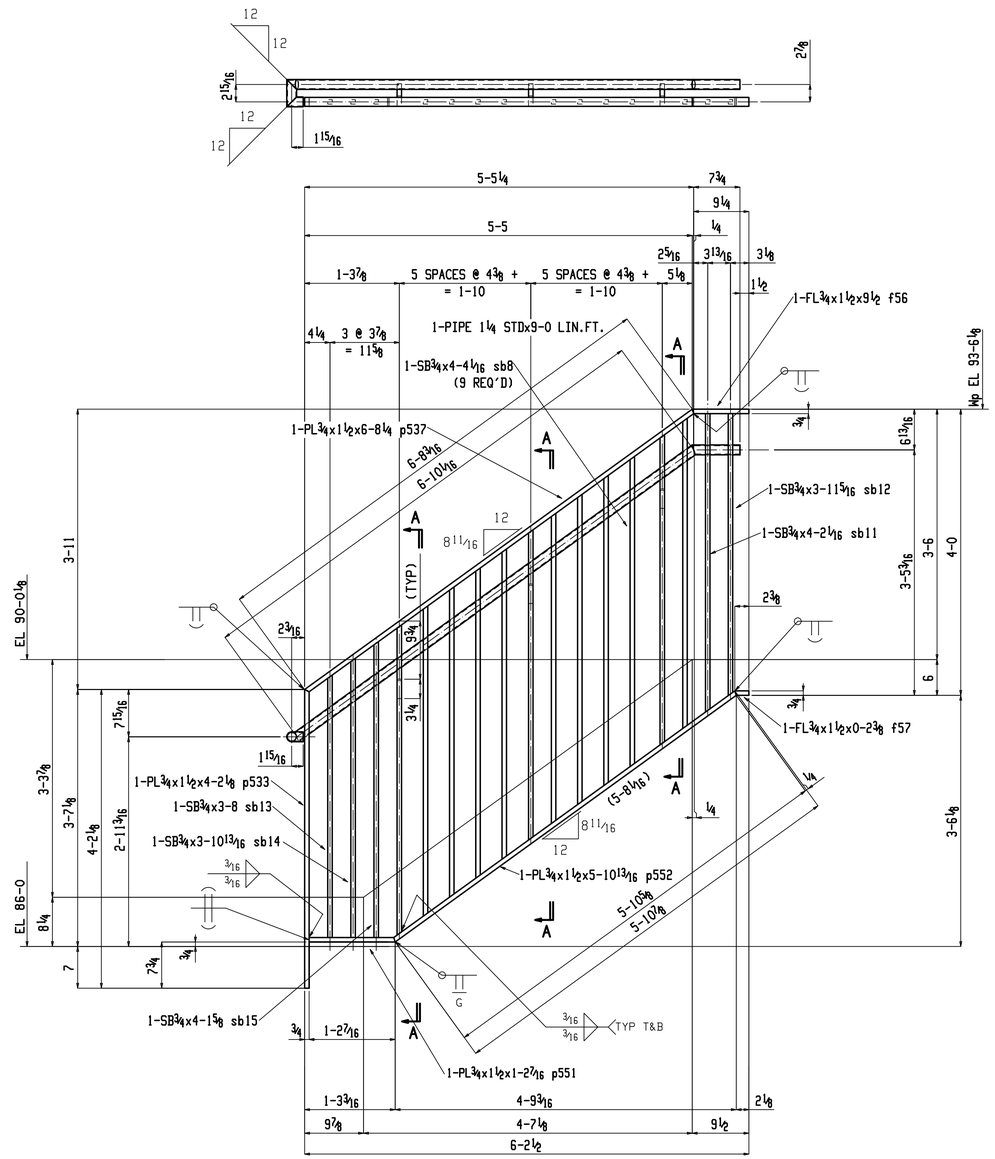

ONE GUARDRAIL 41B

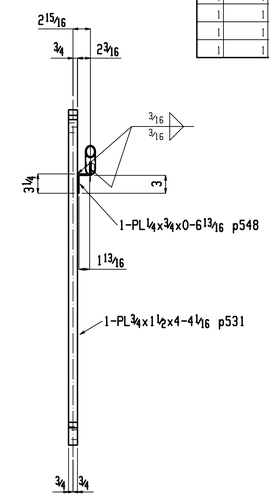

Section A-A

41B

BILL OF MATERIAL

QTY TOTAL	QTY UNIT	PC MARK	DESCRIPTION	LENGTH		REMARKS
ONE		41A	GUARDRAIL			E10
1	1	hss336	PIPE 1 1/4 STD	1	11 15/16	A53
2	2	p549	PL 1/4x3/4	0	6 13/16	BENT A36
2	2	p536	PL 3/4x1 1/2	3	10 1/2	A36
2	2	p523	PL 3/4x1 1/2	1	11 15/16	A36
5	5	sb10	SB 3/4	3	10 1/2	A36
ONE		41B	GUARDRAIL			E10
1	1	hss323	PIPE 1 1/4 STD	9	0	LIN FT A53
3	3	p548	PL 1/4x3/4	0	6 13/16	BENT A36
1	1	p533	PL 3/4x1 1/2	4	2 1/8	A36
1	1	p551	PL 3/4x1 1/2	1	2 7/16	A36
1	1	f56	FL 3/4x1 1/2	0	9 1/2	A36
1	1	f57	FL 3/4x1 1/2	0	2 3/8	A36
1	1	p537	PL 3/4x1 1/2	6	8 1/4	A36
1	1	p552	PL 3/4x1 1/2	5	10 13/16	A36
3	3	p531	PL 3/4x1 1/2	4	4 1/16	A36
9	9	sb8	SB 3/4	4	4 1/16	A36
1	1	sb15	SB 3/4	4	1 5/8	A36
1	1	sb11	SB 3/4	4	2 1/16	A36
1	1	sb14	SB 3/4	3	10 13/16	A36
1	1	sb12	SB 3/4	3	11 5/16	A36
1	1	sb13	SB 3/4	3	8	A36

0 4-21-17: FOR APPROVAL

Sequence: -
Ref. E-Plans: SEE BOM
Material: ASTM A36 U.N.O.
Edge Dist.: 1 1/4" U.N.O.
Holes: 13/16" UNO
Bolts: NOTED
Cleaning: SSPC-SP2 & 3
Paint: SHOP PRIME - GRAY (055213)
(S-W #B50AV8431 UNIV. MOD. ALKYD PRIMER)

ATLAS IRON WORKS — EST. 1988

Project: WEBSTER UNIVERSITY
Customer: PARIC
Owner: WEBSTER UNIVERSITY
Location: WEBSTER GROVES, MO.
Dwn: SAM Date: 04-20-17 Ckd: BD Date: 4-21-17
Job No. A16013M
DWG#: 41